Contents

..... 1

..... 6

..... 8

..... 14

..... 18

..... 20

..... 23

C

)

⚠

□

⚠)

□

⚠)

□

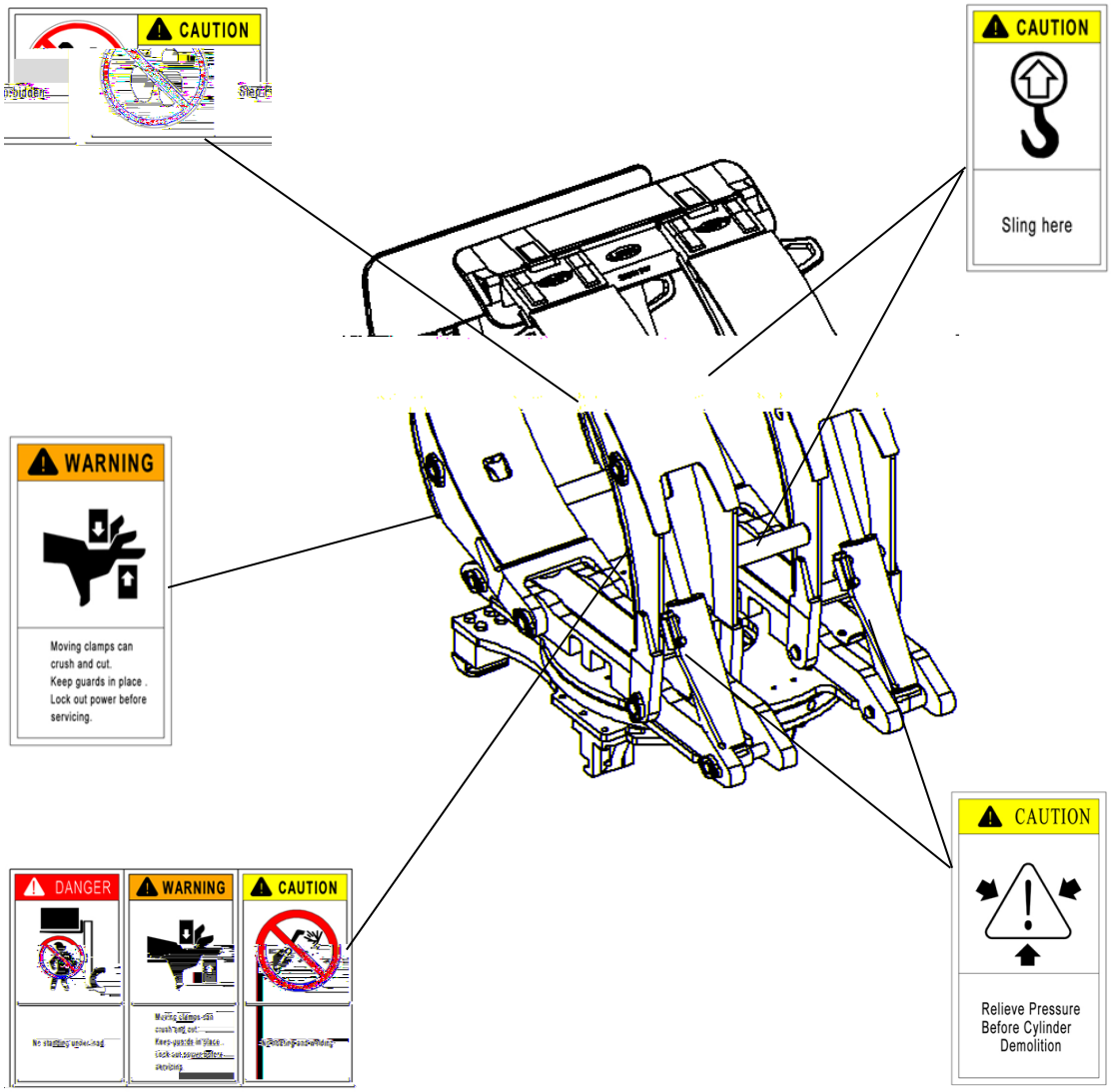
CAUTION
CAUTION
Sling here
WARNING
Moving clamps can crush and cut. Keep guards in place . Lock out power before servicing.
DANGER
WARNING
CAUTION
CAUTION
Relieve Pressure Before Cylinder Demolition

■

□

■ 0

□

■ C

□

■ F

7

□

■ !

'

F □

□

" □ 0

D

WARNING!

" !

■ T □0

■ F

□D

□: □

■ 3

□C

□

■ 8

□

■ B □C

□

8B % 8B 8B "! □)

□

□□

□

■ F

□

■ 0

□0 □;

□

B

)

■ 8

■ 8

■ 8

5

□C □

□

C

□

5 □

□

1 7

6

1

8

C

0

C

1

D □

! ' □

□E

□C

)

Model	Pressure value bar		Flow value L/min		
			Rotary motion		
	min	max	min	recommend	max
ZJ10R/11R/12R/13R/13H	140	160	19	26	38
ZJ22H/25H/27H/33H	140	160	19	38	57
ZJ38H/35R/42H/45R	140	160	38	57	76

3)

5 □

5

□

C 8B ! "! ' !

)

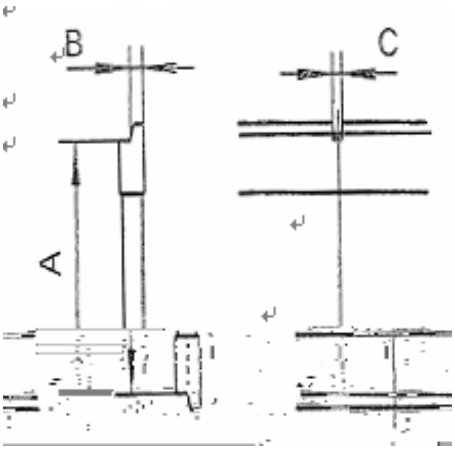

Figure 1

Installation level	A		B		C	
	min	max	min	max	min	max
	380	381	15	16	15.2	16.8
	474.5	476	20.5	21.5	18.2	19.8
	595.5	597	24.5	25.5	18.2	19.8

□

)1

□

"□ 2

□

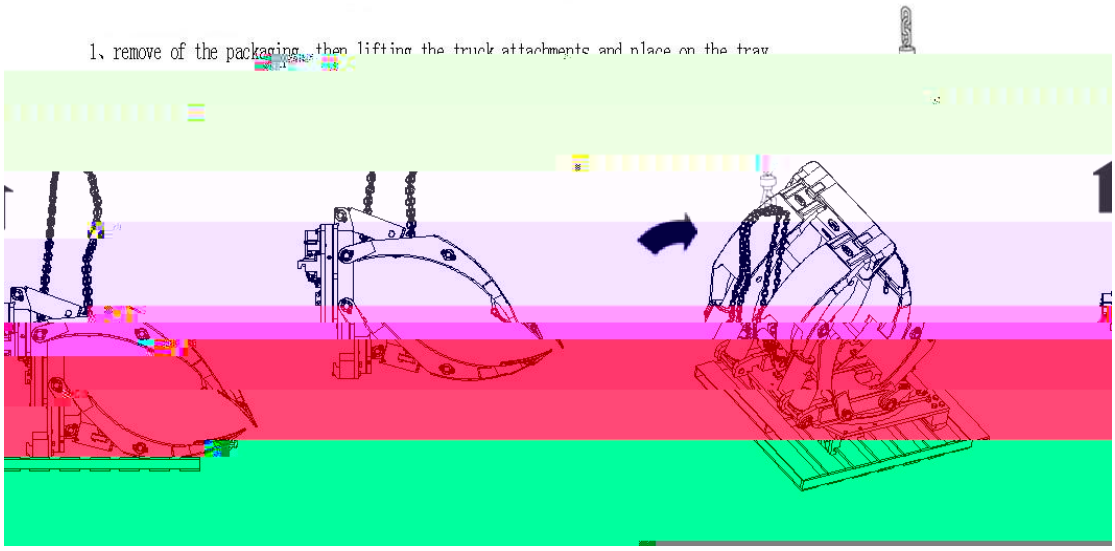

⚠)C □

"□ A

□8

6;

B0 4 ' F (

"□

□

"□ A □

"□ ; □

; □0

□

"□% □C

□C !

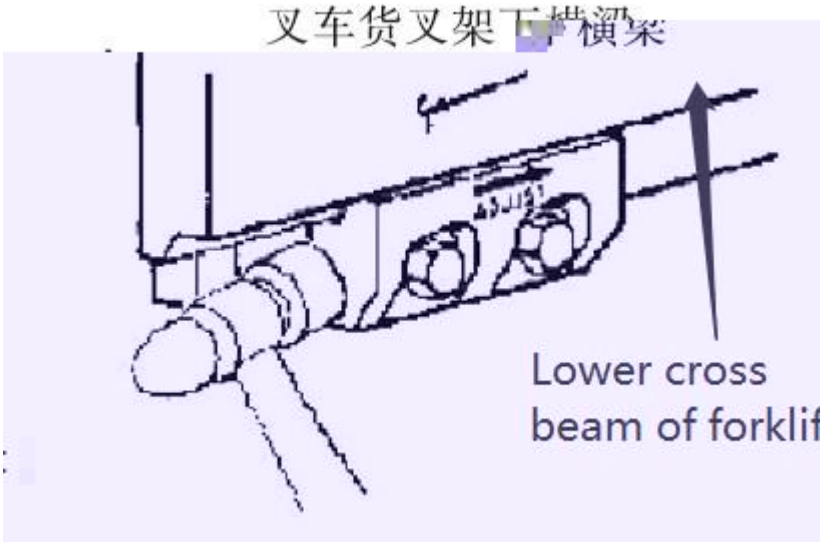

"□ 2 □

)

! % :

"

! % : □

B 7

□C ' □

□

C

)

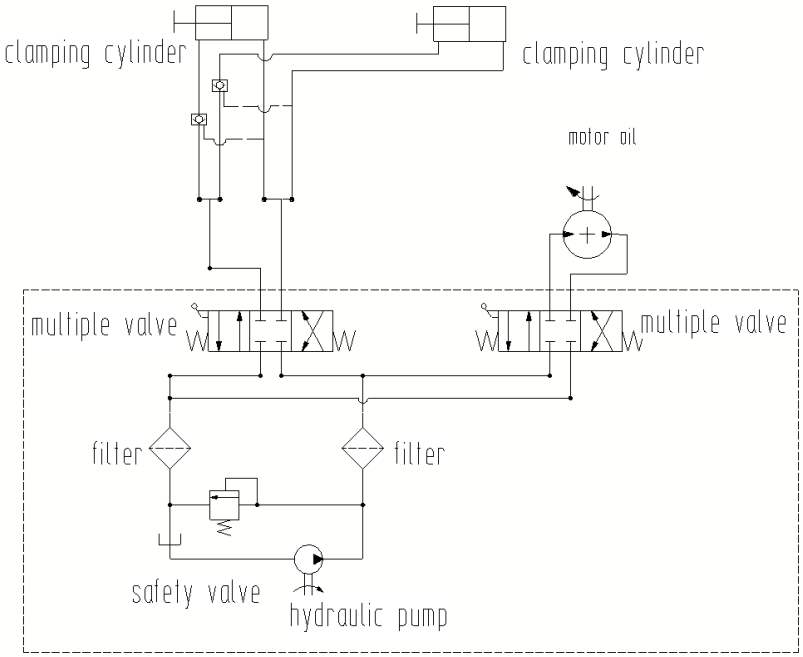
clamping cylinder
clamping cylinder
motor oil
multiple valve
multiple valve
filter
filter
safety valve
hydraulic pump

" 0

"(F

8

1

!

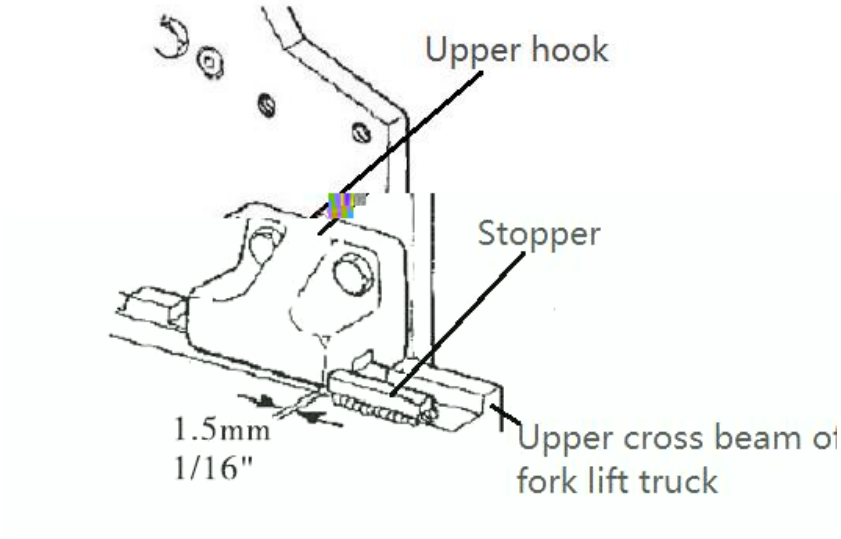

Upper hook Stopper Upper crossbeam of the forklift carriage

"□ B □

□

"□)

2

□)

□

! 7

□

C □

□

5) C

□

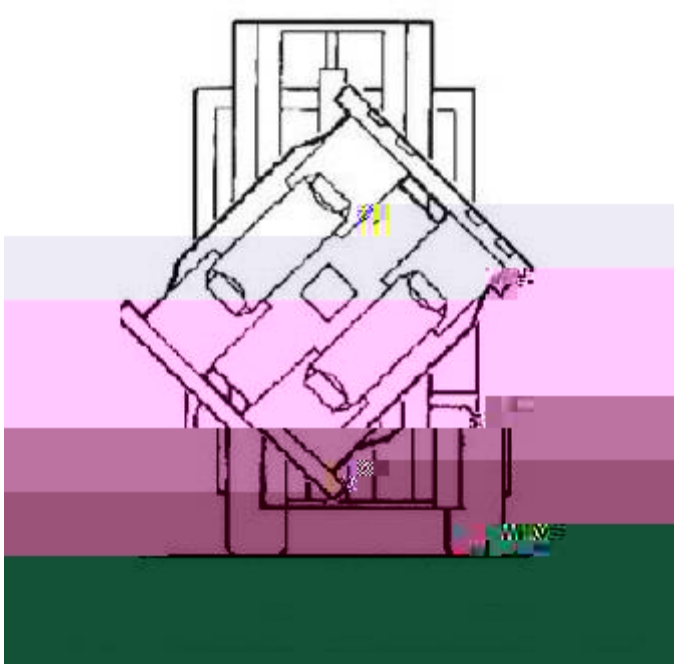

Turn to any point of 45° to adjust the short arm

" 2 □2

□

⚠

3

)

5	0	E

A	2	1
	0	5
7	7	1
	A	5

1

□

)C

□

□

□

□! C □

□" C

□

□ 0

)

D

;

5

4

B

4

F

B

A

D

C

%0

0

"

' 5

(5)

D

F

□:

□

F

"

□

F

" □

□ 5

□

□ :

□

□! ; □

□"

□

□ C

)

□

□ C)

C

C

C

2

C

3

! !)

□ !

2

2

□

2

)0

□□

2

2

6; B0 4 ' F (

□

□! !

C !

)

2

□

C □7

2 □8

2

!

D

□8

□

C) F

5 5

□

%□ B)

8)

" ;

7)

1)

□

%□ B)

)

;)

□

%" 2)

8)

1)

0)

7)

5)

7)

□8

□

%□ 5)

7)

B)

B) □

%□ B)

8)

0)

8)

7)

0)

7)

□

%%;)

4

)

2

%;)

C 0 ; 4

C 0 2 □; □C

□

□ C

0 ; 4 C 0 2 □; □

!

□

! 4

□")

0 ; 4 C 0 2 □; □

0 □

! C 0 ; 4 C 0 2 □; □

□

" 0 ; 4 C 0 2 □; □

0 ;

4 C 0 2 □; □